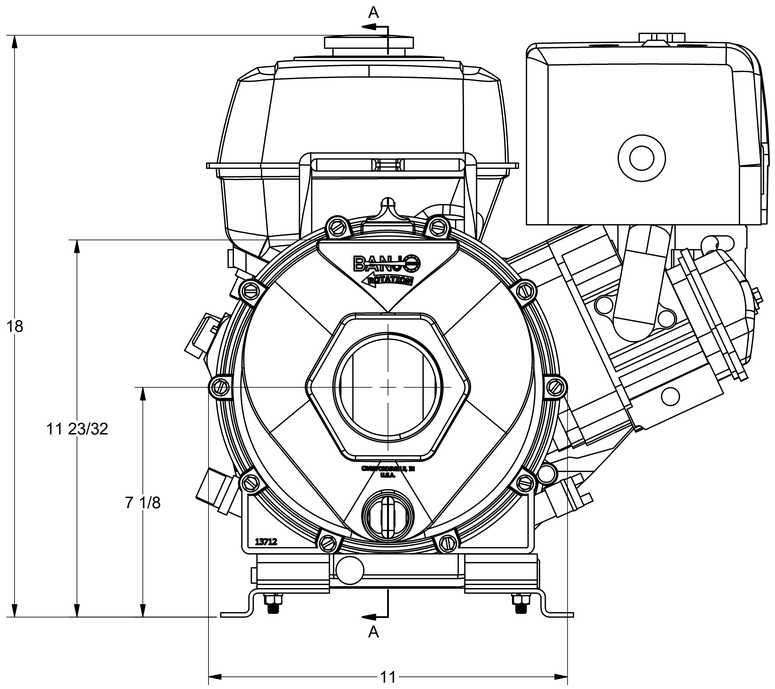

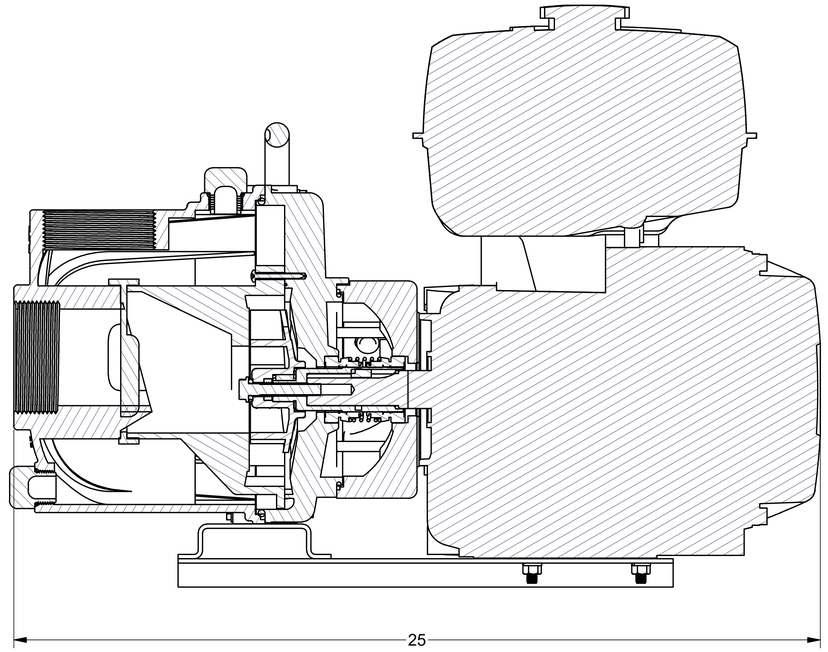

Parts List			
ITEM	QTY	PART NUMBER	DESCRIPTION
1	1	12201W	3" WET SEAL RESERVOIR
2	1	12703AW	3" WET SEAL REAR BRKT
3	1	12705	CHECKVALVE
4	4	12709	MOTOR MT O'RING
5	4	12717	O'RING FOR BRKT SCREW
6	1	12719A	PUMP BODY O'RING
7	10	12720	1/4-20 X 2 1/2" SCREW
8	2	12725	#6 X 1/2" PPH SMS
9	1	12754	O'RING SEGMENT
10	1	12775A	7/16-14 HEX NUT
11	2	12777	1/2" DRAIN PLUG
12	1	12900	#10 X 1 1/2" PPH SMS
13	8	12901	5/16" FLAT WASHER
14	1	12902A	3/16" SQ. X 5/8" KEY
15	1	12910	PUMP DECAL (N/S)
16	4	13034	5/16-24 X 3 1/2" HHCS
17	1	13055	ADAPTER SHAFT
18	1	13702	VOLUTE
19	1	13712P	3" PUMP BODY ASSY.
20	1	13719	RESERVOIR O'RING
21	1	13766	3/8-24 X 2 1/4" HFS
22	1	13772	IMPELLER
23	1	15035E	MECH. SEAL ASSY.
24	1	16901	1/4" SQ. X 3/4" KEY
25	4	17029	5/16-18 X 1.75" HHCS
26	1	18135A	Z-RAIL
27	1	18135B	Z-RAIL
28	1	A204	#204 O'RING, EPDM
29	1	CV10175	GASKET
30	1	E13H	13 HP HONDA ENGINE
31	1	KK-57	WET SEAL WARNING TAG (N/S)
32	2	UV15163	#114 O'RING, EPDM
33	10	V07018	1/4" LOCKWASHER
34	10	V07019	1/4" HEX NUT
35	4	V10118	5/16" LOCK WASHER
36	4	V10119	5/16-18 HEX NUT

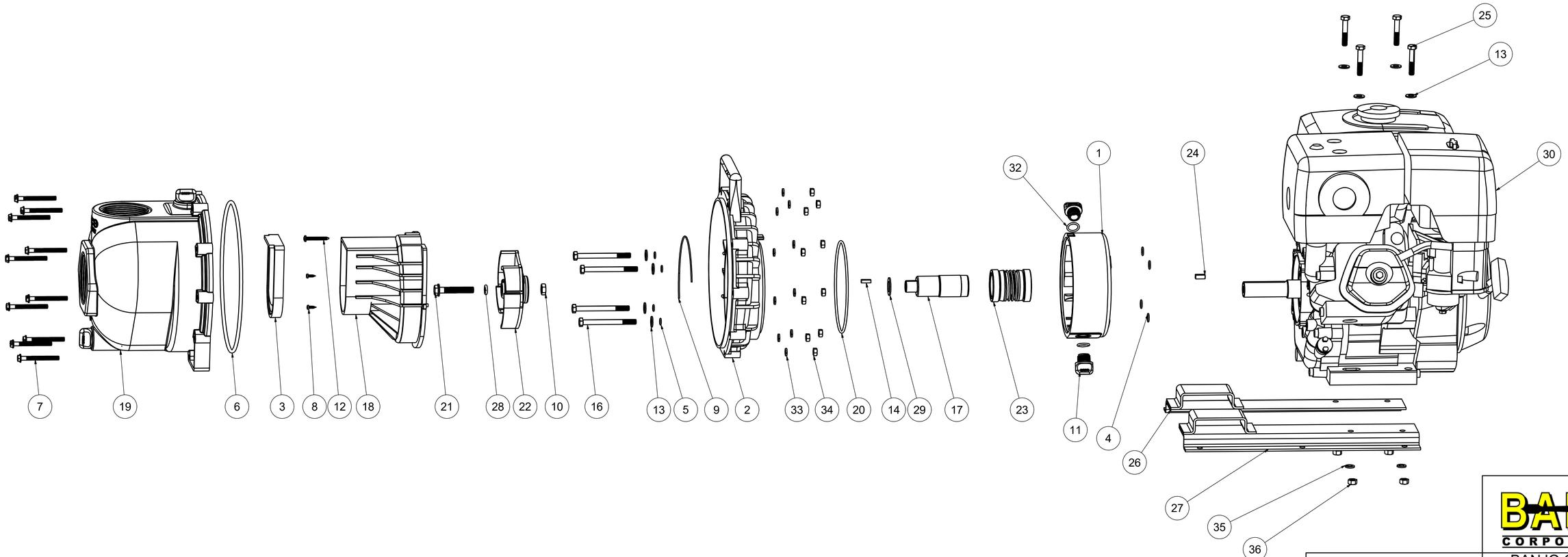

THIS DRAWING AND ALL INFORMATION CONTAINED THEREON ARE THE EXCLUSIVE PROPERTY OF BANJO CORPORATION.

UNLESS SPECIFACALLY NOTED, THIS DRAWING AND ITEMS SHOWN ON THIS DRAWING ARE SUBJECT TO CHANGE AT ANY TIME.

BANJO CORPORATION
150 BANJO DRIVE, CRAWFORDSVILLE, IN 47933
WEB SITE: WWW.BANJOCORP.COM
E-MAIL: SALES1@BANJOCORP.COM

DESCRIPTION
3" POLY WET SEAL PUMP

PART NUMBER
300PH13W