S10/ S20 Installation Instructions

PREPARATION

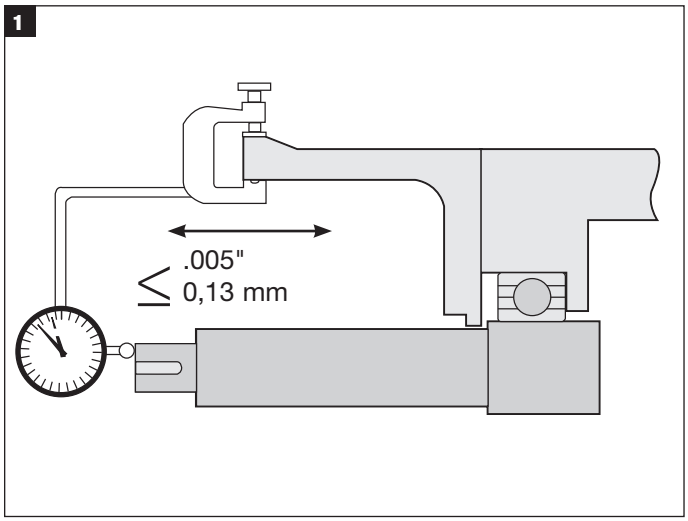

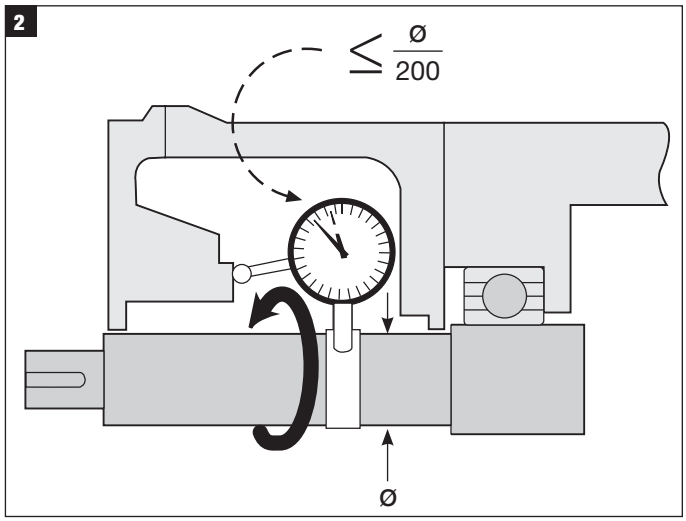

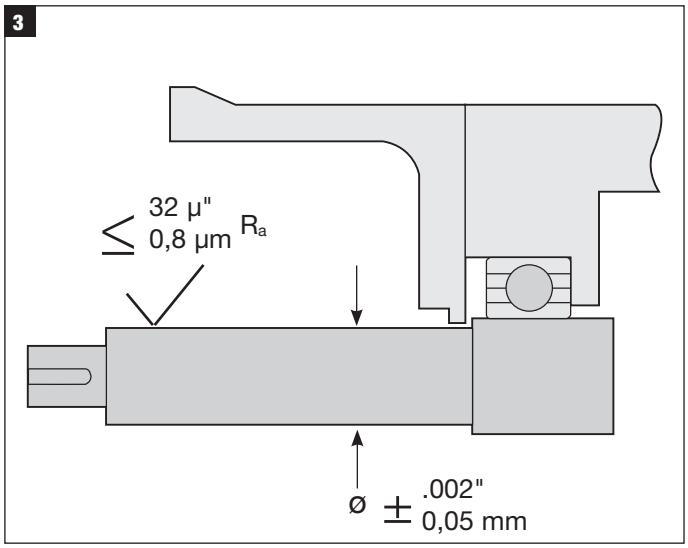

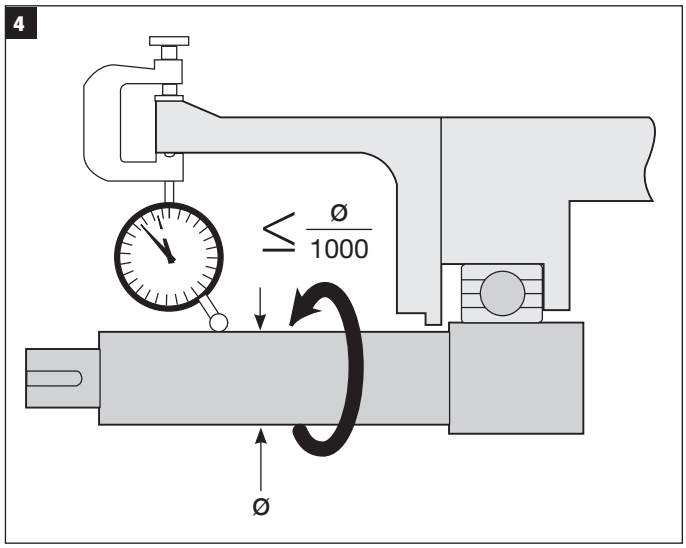

CAUTIONS

These instructions are general in nature. It is assumed that the installer is familiar with seals and certainly with the requirements of their plant for the successful use of mechanical seals. If in doubt, get assistance from someone in the plant who is familiar with seals or delay the installation until a seal representative is available. All necessary auxiliary arrangements for successful operation (heating, cooling, flushing) as well as safety devices must be employed. These decisions are to be made by the user. The chemical listing is intended as a general reference for this seal only. The decision to use this seal or any other Chesterton seal in a particular service is the customer's responsibility.

S10/S20 LOCK RING ASSEMBLY / TORQUE TABLE

S10/S20
XS/Small Lock Ring

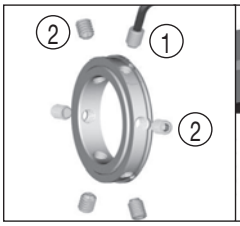

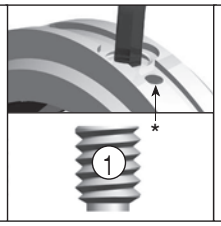

S10/S20
Large Lock Ring

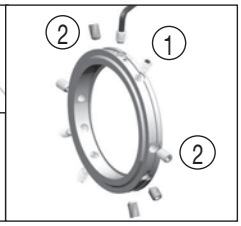

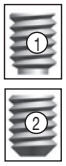

S10/S20
Set Screw/Bolting Torques Table

SEAL SIZE	DOG POINT SET SCREWS	CUP POINT SET SCREWS	STUFFING BOX BOLTS
up to 2.50" (60 mm)	50-60 in-lbf (5,7-6,8 Nm)	50-60 in-lbf (5,7-6,8 Nm)	20-30 ft-lbf (27-40 Nm)
up to 4.75" (120 mm)	65-75 in-lbf (7,3-8,3 Nm)	65-75 in-lbf (7,3-8,3 Nm)	25-35 ft-lbf (34-48 Nm)

* See marks on the lock ring for the Dog Point Set Screws (1).

S10 SEAL GLAND / CASSETTE MATERIAL COMPATIBILITY

NOTE: The Gland and Cassette must be the same material.

See S10 Gland / Cassette Material Chart to the right.

GLAND	CASSETTE
316 SS / EN 1.4401	316 SS / EN 1.4401
Alloy 20 / EN 2.4660	Alloy 20 / EN 2.4660
Alloy C276 / EN 2.4819	Alloy C276 / EN 2.4819
Titanium / EN 3.7035	Titanium / EN 3.7035
Alloy B2 / EN 2.4617	Alloy B2 / EN 2.4617
Alloy 400 / EN 2.4360	Alloy 400 / EN 2.4360

S10/S20 GLAND PLUG INSTALLATION

S10 Streamline Single Seal

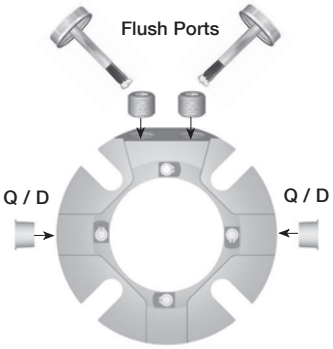

S20 Streamline Dual Seal

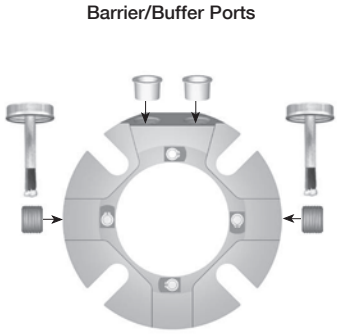

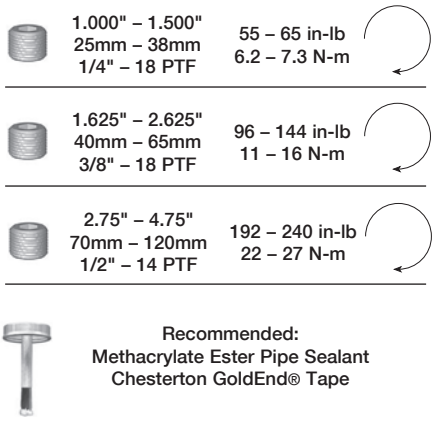

INSTALLATION

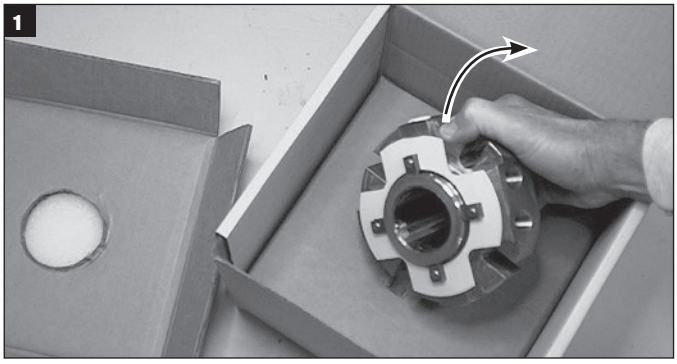

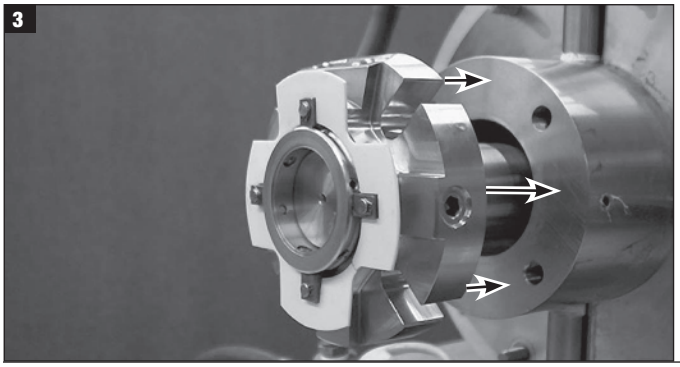

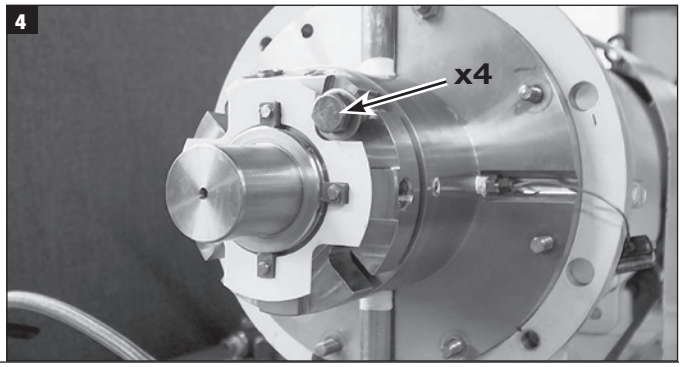

CHESTERTON®
Global Solutions, Local Service.

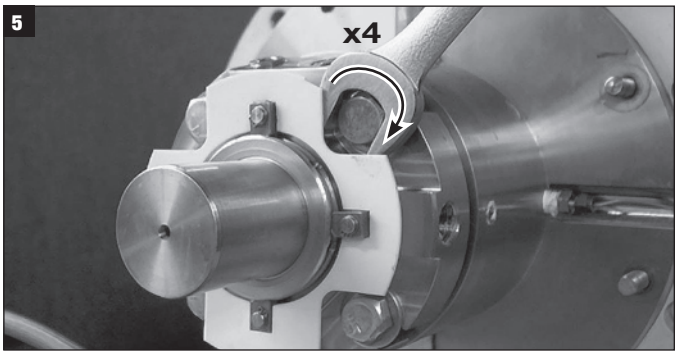

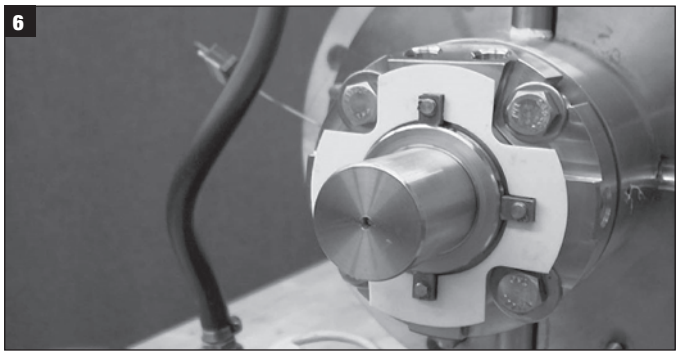

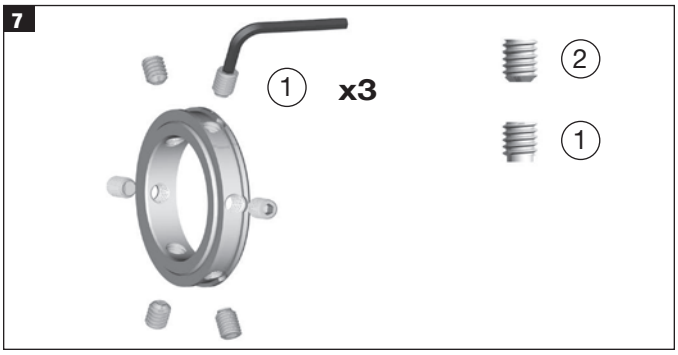

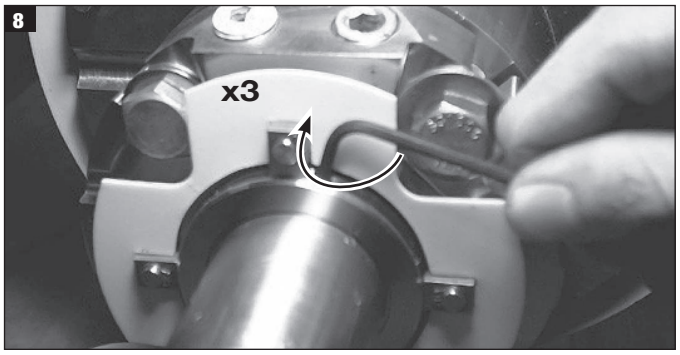

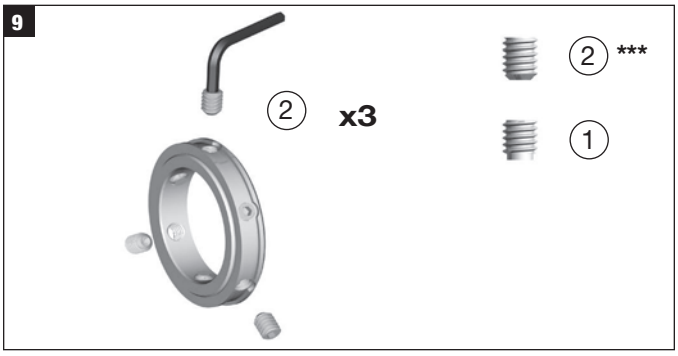

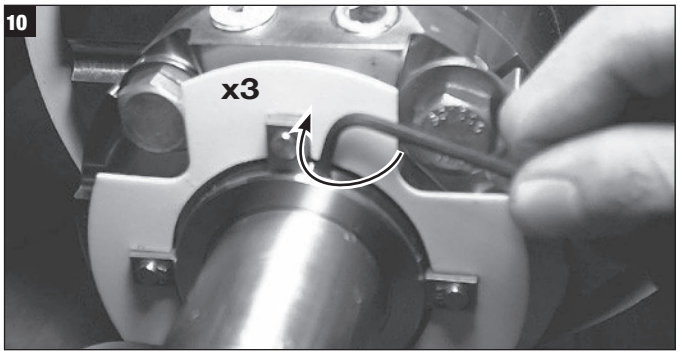

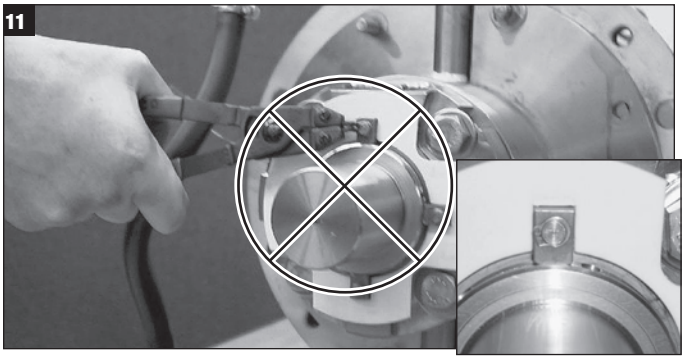

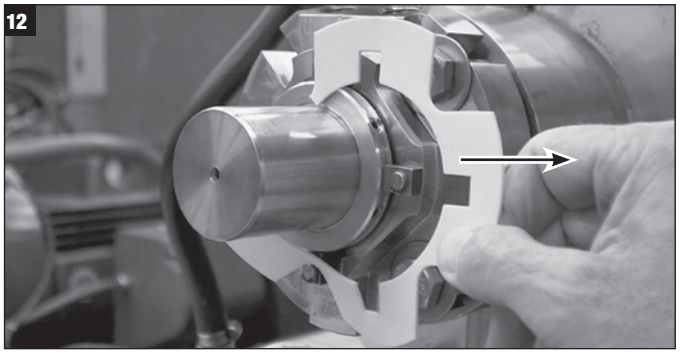

*****CAUTION:** If the seal is operating at a stuffing box pressure over 300 psig (20 bar) for sizes 1" to 2 1/2" (25-60 mm), or 250 psig (16 bar) for sizes 2 5/8" to 4 3/4" (65-120 mm) or if the shaft is case-hardened, replace the 316 stainless steel set screws with the hardened steel set screws supplied with the seal. The 1/4 dog point set screws go into the small holes in the sleeve. Do not disengage these screws from the sleeve when positioning the seal. The cup point set screws go through the larger holes in the sleeve. Make sure all screws are engaged in the sleeve but do not protrude into the ID bore. Also, when repositioning or removing the seal, make sure the centering clips and socket head cap screws are engaged.

ENVIRONMENTAL CONTROLS

13

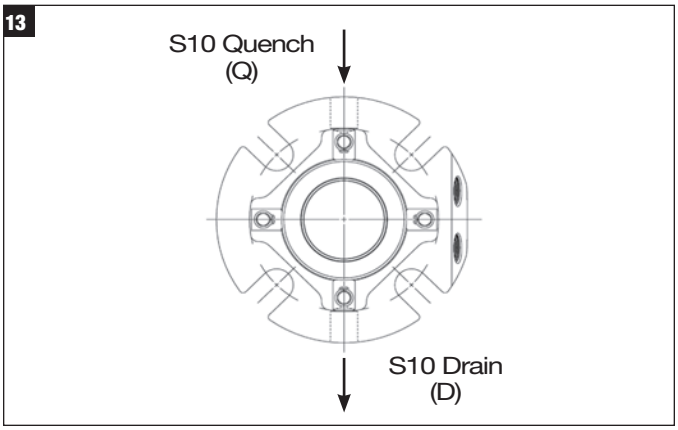

14

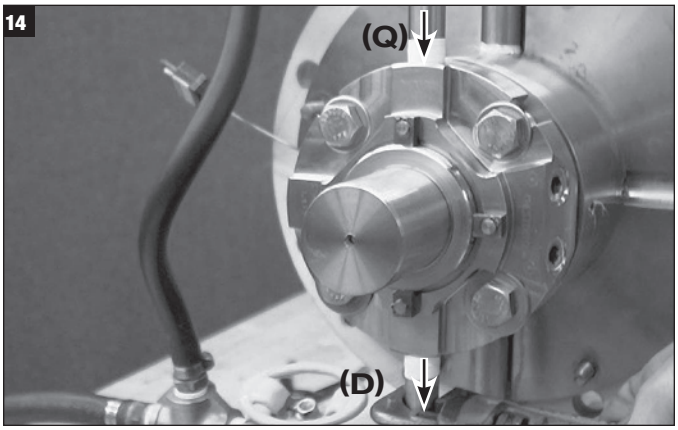

15

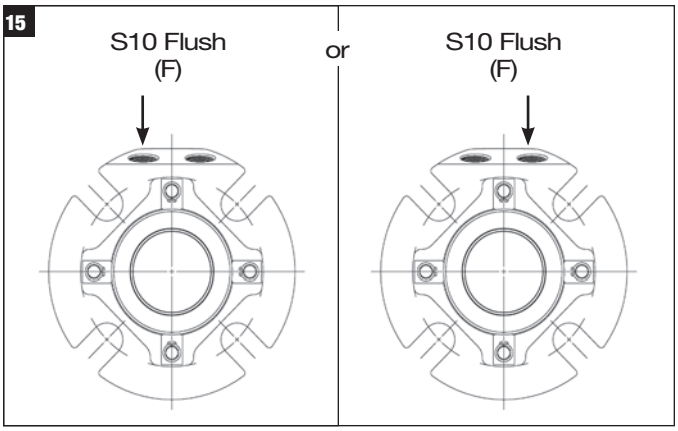

16

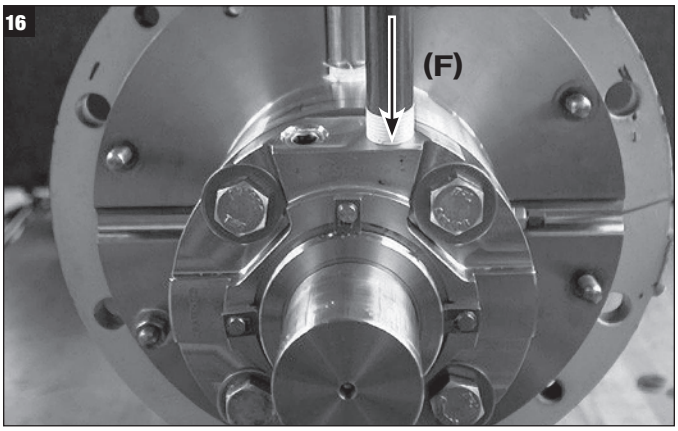

17

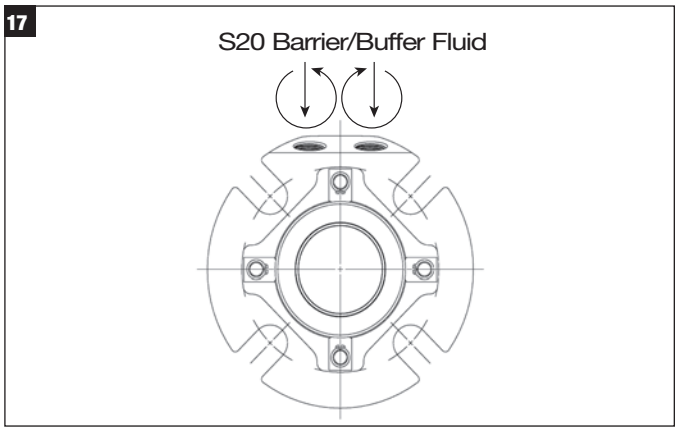

18

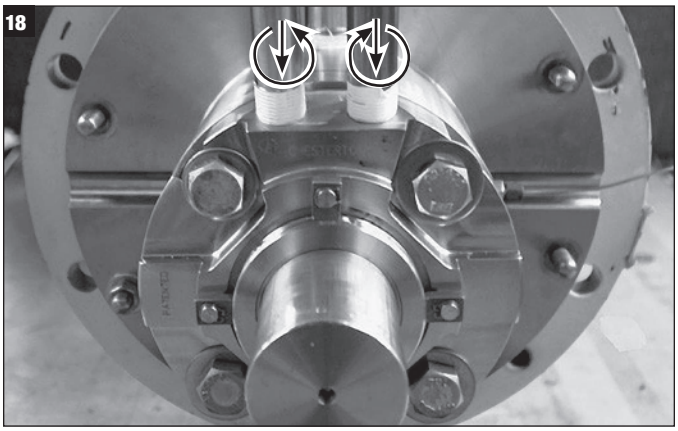

START-UP

19

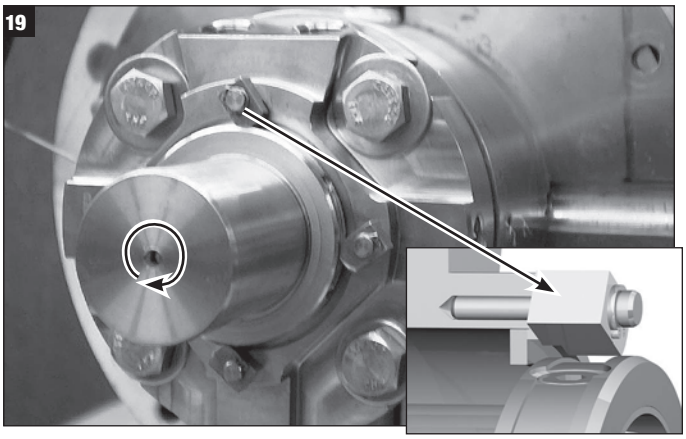

CHESTERTON
Global Solutions, Local Service.

S20 PRESSURE TEST

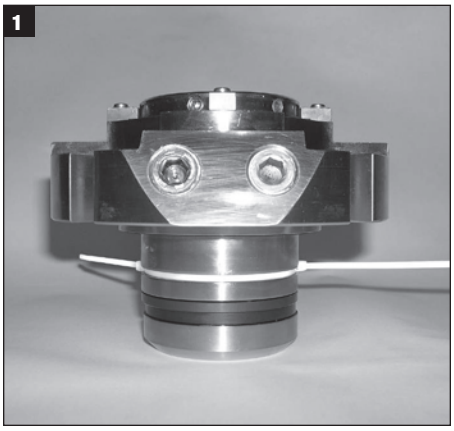

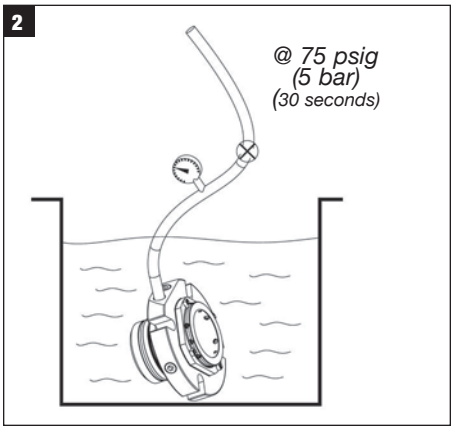

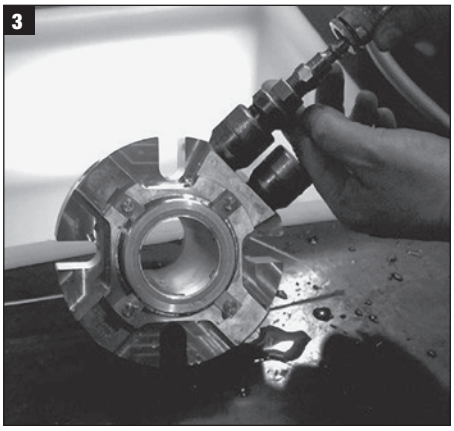

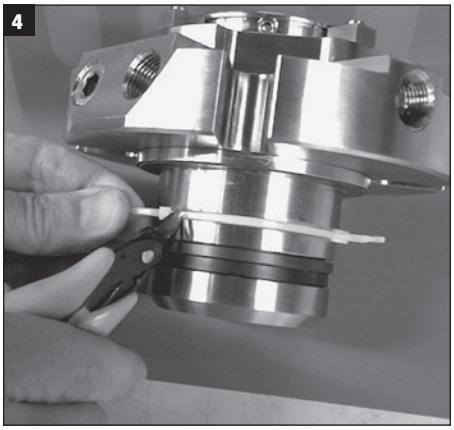

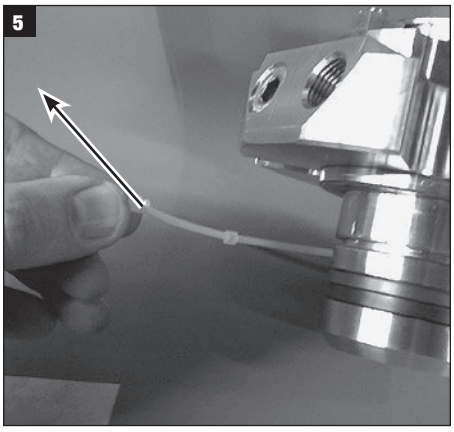

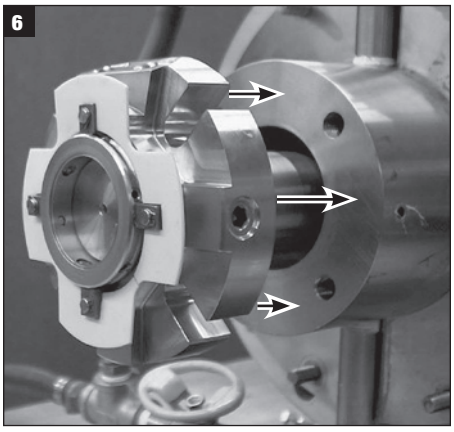

S10/S20 IMPELLER ADJUSTMENT

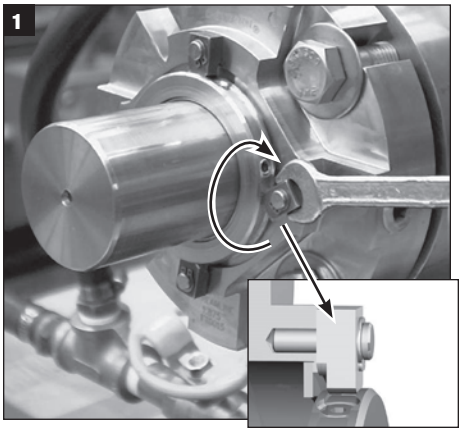

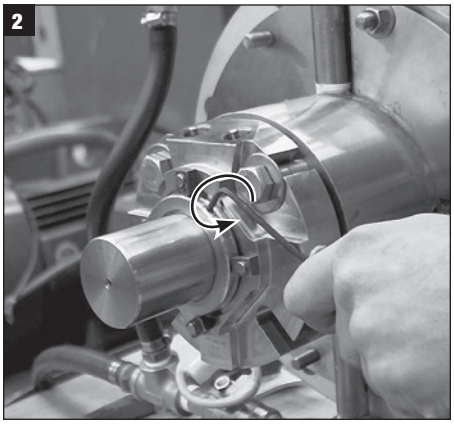

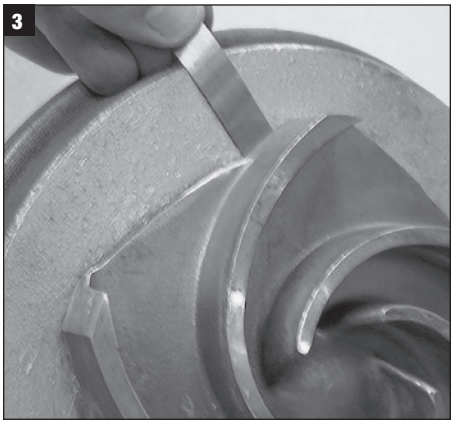

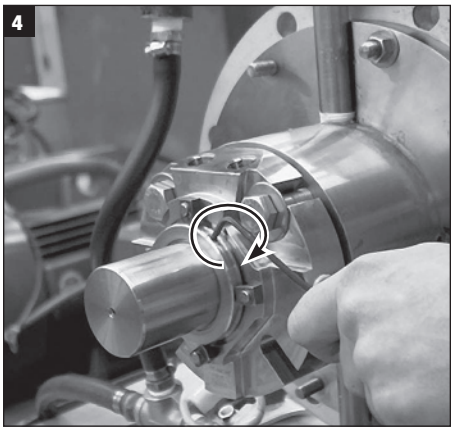

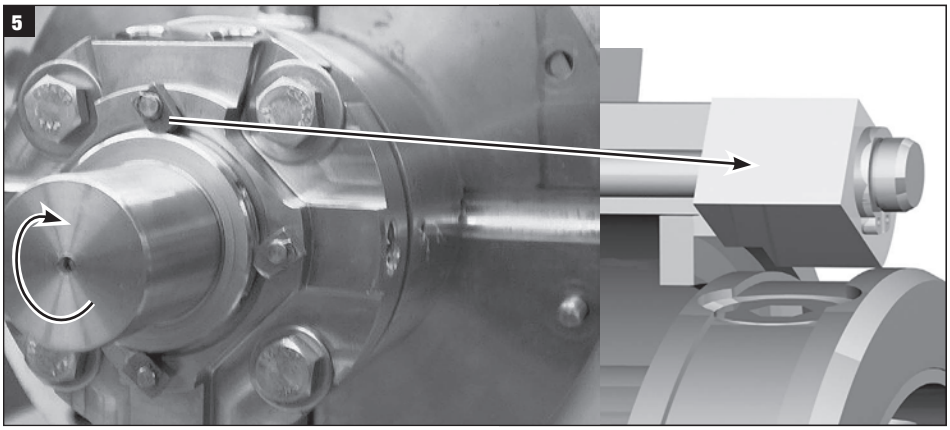

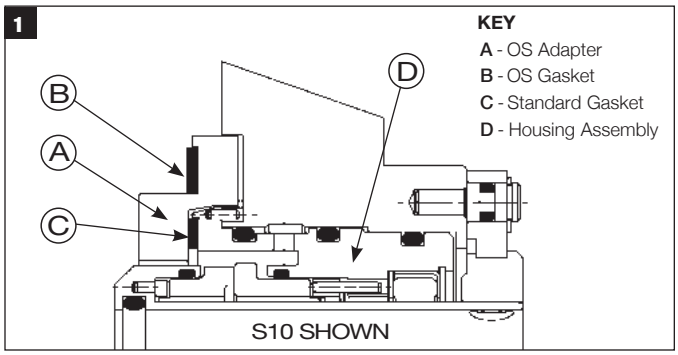

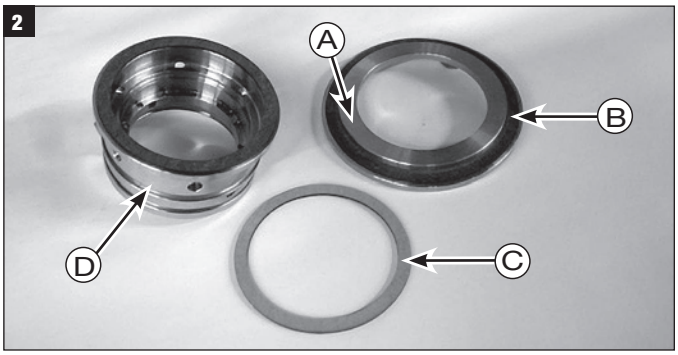

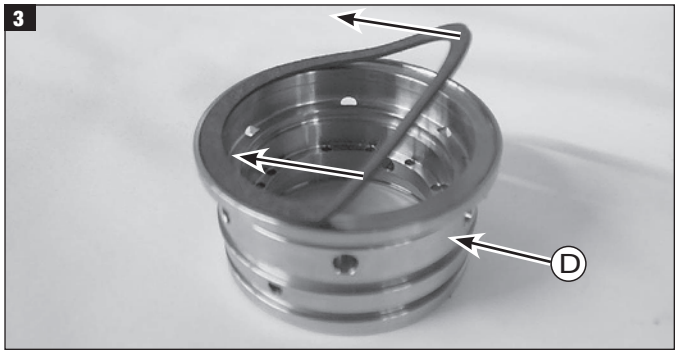

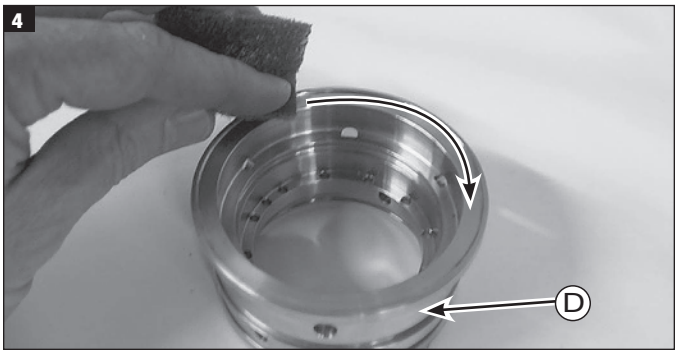

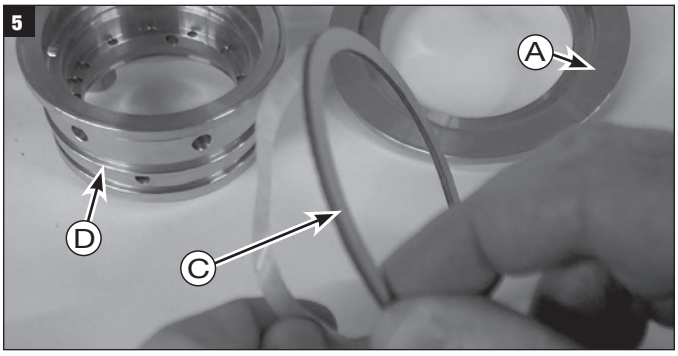

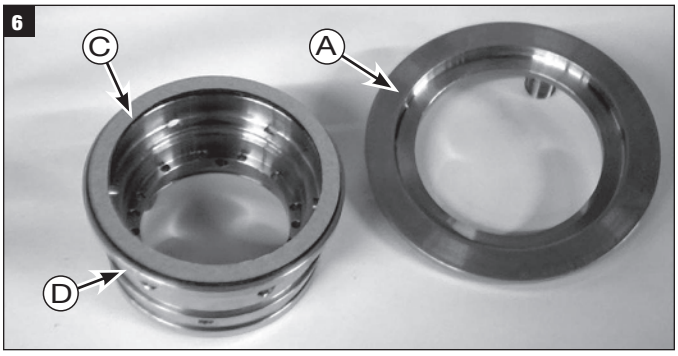

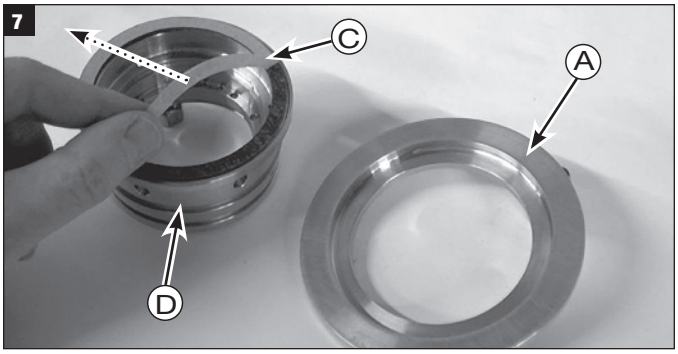

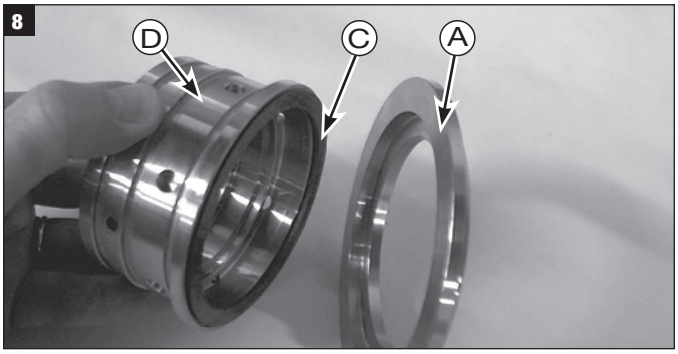

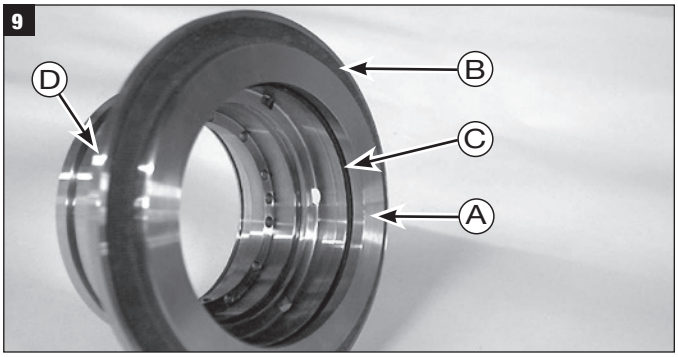

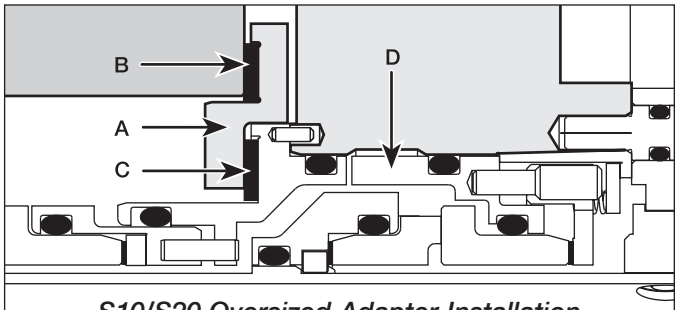

S10/S20 Oversized Adapter Installation
(S20 shown)

CHESTERTON®
Global Solutions, Local Service.

S10 & S20 Extra Small – Dimensional Data/Inch

SHAFT SIZE	GLAND OD	STUFFING BOX BORE		SEAL OD	S20 SB DEPTH	S10 SB DEPTH	OB LENGTH	BOLT CIRCLE BY BOLT SIZE			SLOT WIDTH	SB TO BOLT SURFACE	O-RINGS S10 AND S20 SHAFT	IB ANDOB CASSETTE	ROTARY AND STATIONARY	S20 IB HOUSING	ROTARY HOLDER	S10 QUENCH
A	B MAX	C MIN	C MAX	D	E MIN	E MIN	F	3/8"	G MIN 1/2"	5/8"	H	J			†			
1.000	4.10	1.63	2.01	1.57	1.88	0.51	2.05	2.88	–	–	0.44	1.20	120	133	028	029	025	133
1.125	4.10	1.75	2.04	1.69	1.88	0.51	2.05	2.88	–	–	0.44	1.20	122	135	029	030	027	135
1.125 OS	4.50	2.63	2.94	1.69	1.82	0.51	2.05	3.75	–	–	0.44	1.20	122	135	029	030	027	135
1.250	4.10	1.88	2.27	1.83	1.88	0.51	2.05	3.13	–	–	0.44	1.20	124	138	030	031	029	138
1.375	4.40	2.00	2.33	1.94	1.88	0.51	2.05	3.12	3.35**	–	0.57	1.20	126	139	031	032	030	139
1.375 OS	5.40	2.81	3.00	1.94	1.82	0.51	2.05	3.99	–	–	0.44	1.21	126	139	031	032	030	139

S10 & S20 Extra Small – Dimensional Data/Metric

								10 mm	12 mm	16 mm								
25	104	41.0	51.1	39.9	48	13.0	52	73.5	–	–	11.5	30.4	120	133	028	029	025	133
28	104	44.0	51.8	42.4	48	13.0	52	73.5	–	–	11.5	30.4	122	135	029	030	027	135
30	104	46.0	56.6	44.5	48	13.0	52	78.0	–	–	11.5	30.4	123	136	030	030	028	136
32	104	48.0	57.7	46.5	48	13.0	52	79.8	–	–	11.5	30.4	124	138	030	031	029	138
33	113	49.0	58.8	47.4	48	13.0	52	80.1	82.1	–	15.0	30.4	125	138	031	031	029	138
35	111	51.0	59.2	49.4	48	13.0	52	79.7	83.9**	–	15.0	30.4	126	139	031	032	030	139

S10 & S20 Standard & Oversize – Dimensional Data/Inch

SHAFT SIZE	GLAND OD	STUFFING BOX BORE		SEAL OD	S20 SB DEPTH	S10 SB DEPTH	OB LENGTH	BOLT CIRCLE BY BOLT SIZE			SLOT WIDTH	SB TO BOLT SURFACE	O-RINGS S10 AND S20 SHAFT	IB ANDOB CASSETTE	ROTARY AND STATIONARY	S20 IB HOUSING	ROTARY HOLDER	S10 QUENCH
A	B MAX	C MIN	C MAX	D	E MIN	E MIN	F	3/8"	G MIN 1/2"	5/8"	H	J	1 each	2 each				
1.500	4.50	2.25	2.44	2.19	1.97	0.53	2.11	3.32	3.57**	–	0.57	1.20	128	143*	135	136	130	142*
1.625	5.00	2.38	2.70	2.31	1.97	0.53	2.11	3.52	3.69**	–	0.57	1.20	130	145*	137	138	132	144*
1.750	5.50	2.50	2.81	2.44	1.97	0.53	2.11	3.64	3.82**	–	0.57	1.20	132	147*	139	140	134	146*
1.750 OS	6.64	3.50	3.75	2.44	1.97	0.53	2.11	5.37	5.50	–	0.57	1.20	132	147*	139	140	134	146*
1.875	5.50	2.63	2.94	2.56	1.97	0.53	2.11	3.77	3.94**	–	0.57	1.20	134	149*	141	142	136	148*
1.875 OS	5.99	3.56	3.81	2.56	1.97	0.53	2.11	–	5.00	–	0.57	1.20	134	149*	141	142	136	148*
2.000	5.50	2.75	3.19	2.69	1.97	0.53	2.11	4.02	4.14	–	0.57	1.20	136	150*	143	144	138	149*
2.125	6.00	2.88	3.44	2.81	1.97	0.53	2.11	4.27	4.39	4.52	0.69	1.20	138	152	145	146	140	151
2.125 OS	6.99	3.88	4.25	2.81	1.66	0.22	2.42	–	5.13	5.25	0.69	1.51	138	152	145	146	140	151
2.250	6.00	3.00	3.56	2.94	1.97	0.53	2.11	4.39	4.51	4.64	0.69	1.20	140	152	147	148	142	151
2.375	6.00	3.13	3.62	3.06	1.97	0.53	2.11	4.45	4.57	4.70	0.69	1.20	142	153	149	150	144	152
2.500	6.50	3.25	3.81	3.19	1.97	0.53	2.11	4.64	4.76	4.89	0.69	1.20	144	153	151	151	146	152
2.500 OS	7.77	4.50	4.75	3.19	1.97	0.53	2.11	–	5.88	6.00	0.69	1.20	144	153	151	151	146	152
2.625	6.50	3.38	3.94	3.31	1.97	0.53	2.11	4.88	5.01	5.13	0.69	1.20	146	154	5-557	5-557	148	153
2.625 OS	6.99	4.55	4.88	3.31	1.97	0.53	2.11	–	5.88	6.00	0.69	1.20	146	154	5-557	5-557	148	153

S10 & S20 Standard – Dimensional Data/Metric

								10 mm	12 mm	16 mm								
38	114	57.2	62.0	55.6	50	13.5	54	85.8**	89.3**	–	14.5	30.4	128	143*	135	136	130	142*
40	127	60.0	68.3	57.5	50	13.5	54	89.7	91.7	–	13.5	30.4	129	144*	136	137	131	143*
43	127	63.0	68.8	60.5	50	13.5	54	90.2	94.2**	–	13.5	30.4	131	146*	138	139	133	145*
45	140	65.0	73.4	62.5	50	13.5	54	94.8	96.8	–	13.5	30.4	133	147*	140	141	135	146*
48	140	68.0	73.8	65.5	50	13.5	54	95.1	99.2**	–	13.5	30.4	134	149*	142	143	136	148*
50	140	70.0	78.5	67.5	50	13.5	54	99.8	101.8	–	13.7	30.4	136	150*	143	144	138	149*
53	153	75.0	83.6	72.5	50	13.5	54	104.9	106.9	113.1**	17.5	30.4	137	152	146	147	141	151
55	153	75.0	83.6	72.5	50	13.5	54	104.9	106.9	113.1**	17.5	30.4	139	152	146	147	141	151
60	153	80.0	92.2	77.8	50	13.5	54	113.3	115.3	119.3	17.5	30.4	142	153	149	150	144	152
65	164	88.9	100.1	84.2	50	13.5	54	124.4	126.4	130.4	17.5	30.4	145	154	5-557	5-557	148	153

* Use next size larger for Style 76 O-Rings.

** Using socket head cap screws will reduce bolt circle.

† The S10 uses a quantity of 2 O-Rings and the S20 uses a quantity of 4 O-Rings.

Consult Chesterton Applications Engineering for further information.

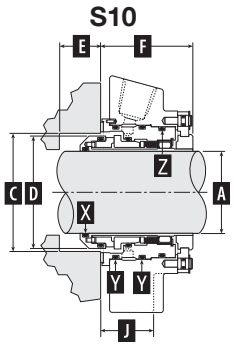

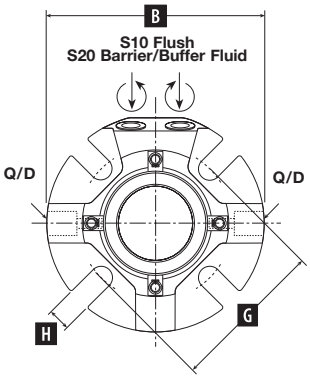

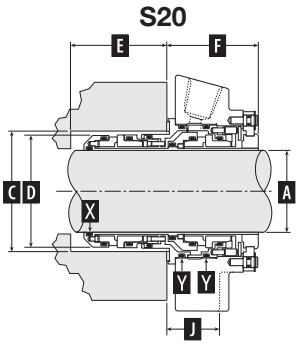

S10 & S20 Large –

Dimensional Data/Inch

													O-RINGS					
													S10 AND S20			S20		S10
SHAFT SIZE	GLAND OD	STUFFING BOX BORE		SEAL OD	S20 SB DEPTH	S10 SB DEPTH	OB LENGTH	BOLT CIRCLE BY BOLT SIZE			SLOT WIDTH	SB TO BOLT SURFACE	SHAFT	IB AND CASSETTE	OB ROTARY AND STATIONARY	IB HOUSING	ROTARY HOLDER	QUENCH
A	B MAX	C MIN	C MAX	D	E MIN	E MIN	F	G MIN 1/2"	5/8"	3/4"	H	J	1 each	2 each	†			
2.750	7.70	3.75	4.36	3.67	2.50	0.83	2.50	5.40	5.53	–	0.69	1.60	232	242	237	238	234	241
2.875	7.83	3.88	4.50	3.79	2.50	0.83	2.50	5.48	5.61	–	0.69	1.60	233	243	238	239	235	242
3.000	7.94	4.00	4.69	3.91	2.50	0.83	2.50	5.63	5.76	–	0.69	1.60	234	244	239	240	236	243
3.125	7.99	4.13	4.80	4.04	2.50	0.83	2.50	5.78	5.91	–	0.69	1.60	235	245	240	240	237	244
3.250	8.19	4.25	4.94	4.16	2.50	0.83	2.50	5.91	6.04	–	0.69	1.60	236	246	241	242	238	245
3.375	8.30	4.38	5.05	4.29	2.50	0.83	2.50	5.98	6.11	6.23	0.81	1.60	237	247	242	243	239	246
3.500	8.44	4.50	5.19	4.41	2.50	0.83	2.50	6.15	6.27	6.40	0.81	1.60	238	248	243	244	240	247
3.625	8.49	4.63	5.30	4.54	2.50	0.83	2.50	6.28	6.40	6.53	0.81	1.60	239	249	244	245	241	248
3.750	8.71	4.75	5.39	4.66	2.50	0.83	2.50	6.35	6.47	6.60	0.81	1.60	241	250	245	246	242	249
3.875	8.84	4.88	5.51	4.79	2.50	0.83	2.50	6.48	6.61	6.73	0.81	1.60	241	251	246	247	243	250
4.000	8.96	5.00	5.69	4.91	2.50	0.83	2.50	6.62	6.75	6.87	0.81	1.60	242	252	247	248	244	251
4.125	8.99	5.13	5.80	5.04	2.50	0.83	2.50	6.74	6.87	6.99	0.81	1.60	243	253	248	249	245	252
4.250	8.99	5.25	5.94	5.16	2.50	0.83	2.50	6.88	7.00	7.13	0.81	1.60	244	254	249	250	246	253
4.375	9.33	5.38	6.06	5.29	2.50	0.83	2.50	6.99	7.12	7.24	0.81	1.60	245	255	250	251	247	254
4.500	9.49	5.50	6.19	5.41	2.50	0.83	2.50	7.14	7.27	7.39	0.81	1.60	246	256	251	252	248	255
4.625	9.49	5.63	6.31	5.40	2.50	0.83	2.50	7.24	7.37	7.49	0.81	1.60	247	257	252	253	249	256
4.750	10.49	5.75	6.47	5.66	2.50	0.83	2.50	7.37	7.49	7.62	0.81	1.60	248	258	253	254	250	256

S10 & S20 Large –

Dimensional Data/Metric

								12 mm	16 mm	20 mm								
70	196	95	110	93	63	21	63	136.4	140.4	–	17	41	232	242	237	238	234	241
75	202	104	119	99	63	21	63	142.3	146.3	–	17	41	234	244	239	239	236	243
80	203	109	122	103	63	21	63	146.1	150.1	–	17	41	236	245	240	241	238	244
85	211	114	128	109	63	21	63	151.1	155.1	160.1	20	41	237	247	242	243	239	246
90	214	119	132	113	63	21	63	158.6	162.6	167.6	20	41	239	248	244	244	240	247
95	221	124	137	118	63	21	63	160.4	164.4	169.4	20	41	240	250	245	246	242	249
100	228	129	144	125	63	21	63	167.4	171.4	176.4	20	41	242	252	247	248	244	251
110	237	137	154	134	63	21	63	176.8	180.8	185.8	20	41	245	255	250	251	247	254
120	266	146	164	144	63	21	63	186.3	190.3	195.3	20	41	248	258	253	254	250	256

† The S10 uses a quantity of 2 O-Rings and the S20 uses a quantity of 4 O-Rings. Consult Chesterton Applications Engineering for further information.

STANDARD MATERIALS*

All Metal Parts: 316 SS / EN 1.4401
Springs: Alloy C276 / EN 2.4819
Rotary Face: Carbon, Tungsten Carbide, or Silicon Carbide
Stationary Face: Tungsten Carbide or Silicon Carbide
Elastomers: Fluorocarbon, EPR, ChemLast™, FEPM, PTFE Encapsulated

* Other materials available upon request.

OPERATING LIMITS

Speed: 0 to 5000 FPM (25 mps)
Process Pressure: 28" Hg Vacuum to 450 psig (31 bar g)
Barrier Pressure (S20): To 450 psig (31 bar g)
IB Seal Pressure Differential: 250 psig (17 bar g)
Temperature:

300°F	(150°C)	EPR
400°F	(205°C)	Fluorocarbon, FEPM
500°F	(256°C)	Perfluoroelastomer

All S10 Seals come assembled with EPR Quench O-Rings.
All S10 and S20 Seals come assembled with FEPM–006 Centering Pad O-Rings.
For higher pressure and temperature applications, consult the factory.

CHESTERTON
Global Solutions, Local Service.

860 Salem Street
Groveland, Massachusetts 01834 USA
Telephone: 781-438-7000
Fax: 978-469-6528
www.chesterton.com

Chesterton ISO certificates available on www.chesterton.com/corporate/iso

© 2024 A.W. Chesterton Company.
® Registered trademark owned by the A.W. Chesterton Company in USA and other countries.